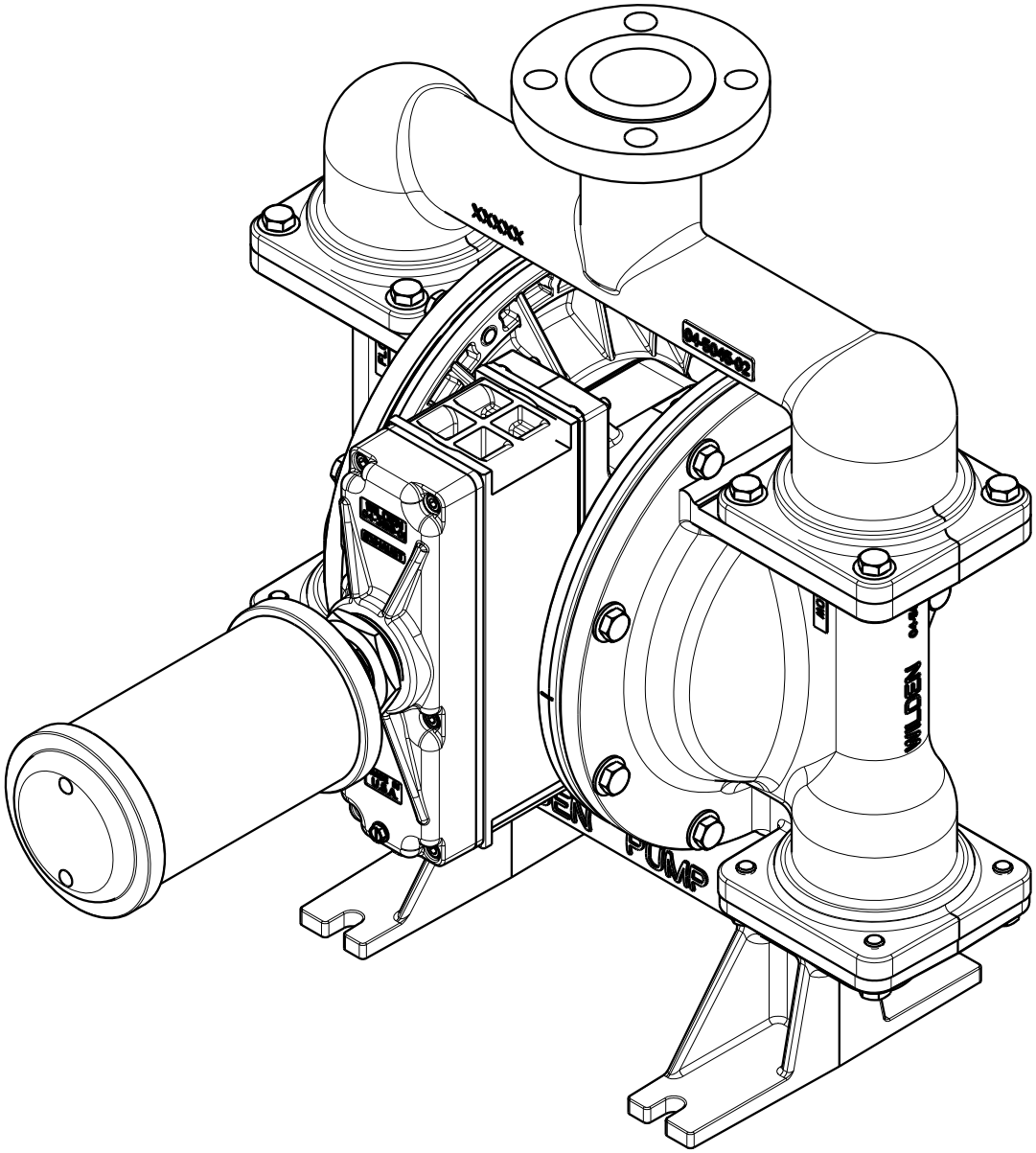
XXXXX
04-50-05-02
WILDEN
PUMP