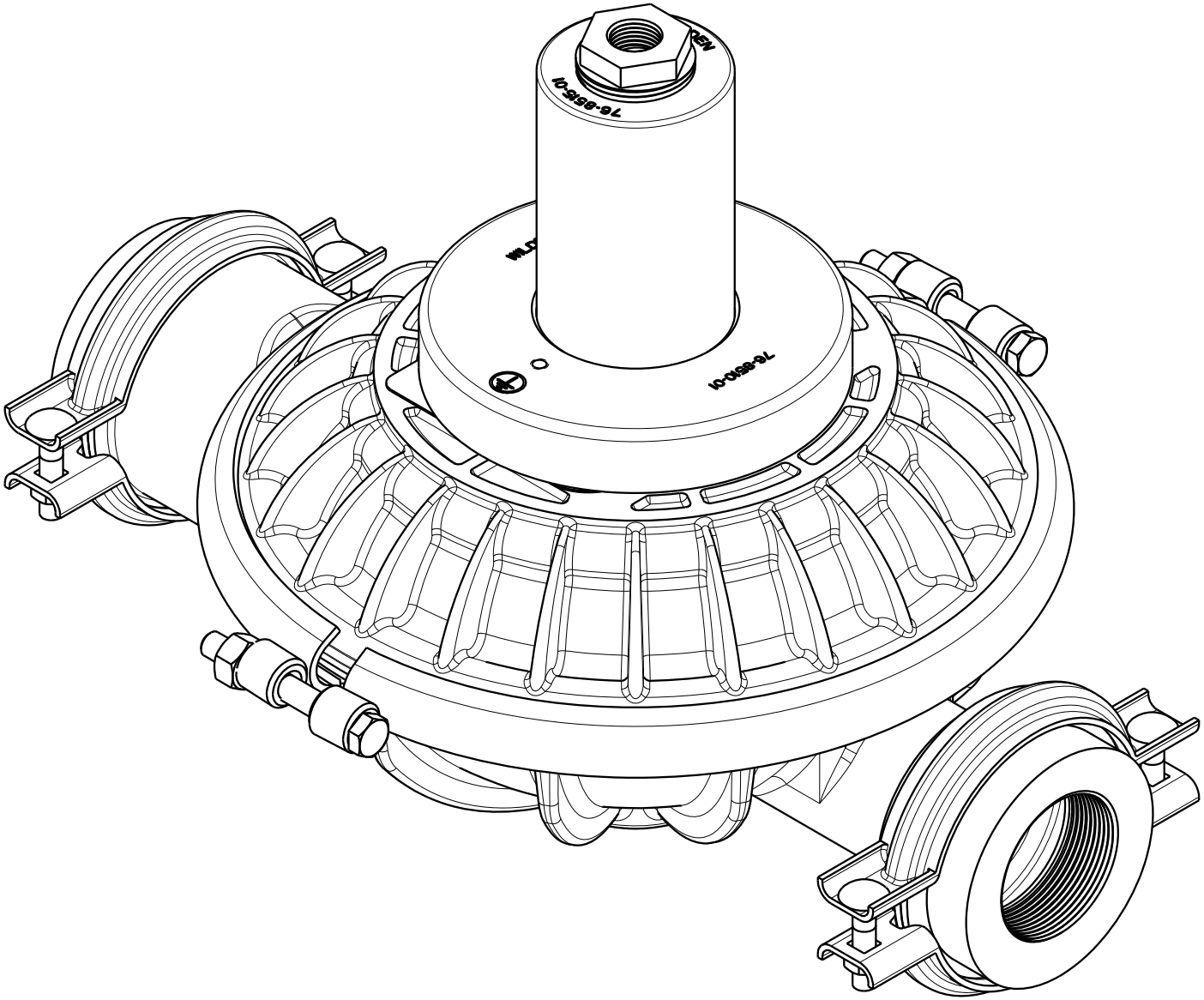
76-855-01
76-850-01